35 AG series
x35x10mm

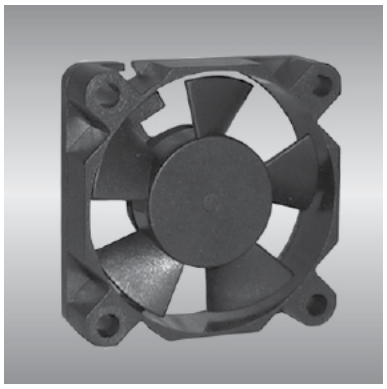

General Specifications

- Motor : 4 Poles brushless DC motor
- Frame & Impller : Plastic(UL 94V-0)
- Storage temperature : -40° to +75°
- Operating temperature : -10° to +70°

Major Characteristic Parameters

Model	*Bearing System	Rated Voltage	Operating Voltage Range	Rated Current	Rated Speed	Maximum Air Flow		Maximum Static Pressure		Sound Level	Weight
Part NO.	B / S / F	V	V	A	RPM	m^3/min	CFM	mm-H_2O	In-H_2O	dBA	g
AGE03510_05L	B / S	5	4.5~5.5	0.05	5000	0.06	2.10	1.8	0.07	18.0	10
AGE03510_05M	B / S	5	4.5~5.5	0.06	6000	0.08	2.72	2.6	0.10	20.0	10
AGE03510_05H	B / S	5	4.5~5.5	0.07	7000	0.14	4.96	3.5	0.14	23.0	10
AGE03510_12H	B / S	12	7.0~13.2	0.03	7000	0.14	4.96	3.5	0.14	23.0	10
AGE03510_05U	B / S	5	4.5~5.5	0.08	8000	0.16	5.51	4.5	0.18	25.0	10
AGE03510_12U	B / S	12	7.0~13.2	0.04	8000	0.16	5.51	4.5	0.18	25.0	10
AGE03510_05V	B / S	5	4.5~5.5	0.10	9000	0.18	6.30	5.5	0.22	28.0	10
AGE03510_12V	B / S	12	7.0~13.2	0.07	9000	0.18	6.30	5.5	0.22	28.0	10

*Bearing system B: Two Ball Bearing F: Fluild Bearing S: Sleeve Bearing

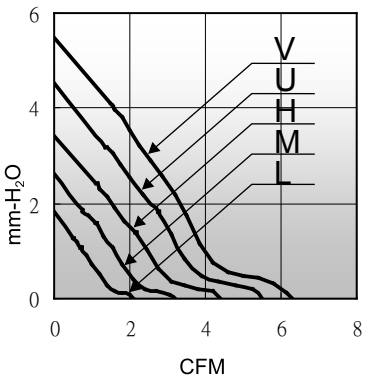

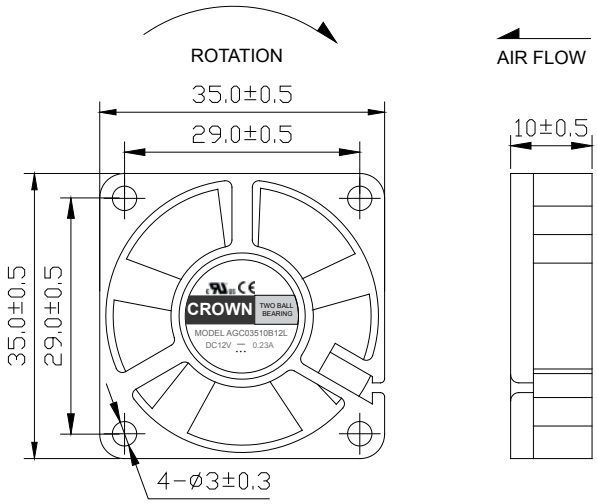

unit:mm